REV	COMMENTS	DATE
B	REDRAWN	5/31/19

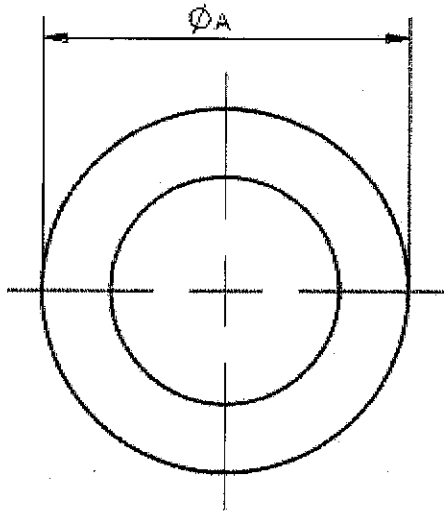

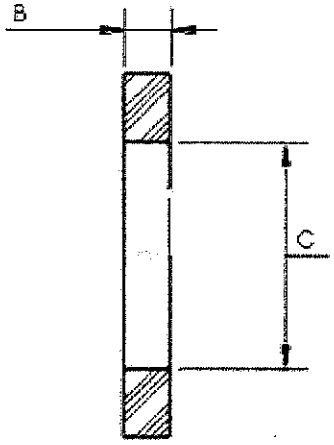

	PART NUMBER	A	B	C
MATERIAL BLACK SBR 80 DURO	5911212W	1.000 ±.010	.125 ±.005	.625 ±.010
	5911616W	1.270 ±.020	.125 ±.005	.860 ±.010

	PART NUMBER	A	B	C
MATERIAL BLACK PEROXIDE CURE EPDM NSF61,70 DURO WITH WHITE STRIPE	5911212WEPDM	1.000 ±.010	.125 ±.005	.625 ±.010
	5911616WEPDM	1.270 ±.020	.125 ±.005	.860 ±.010

THIS DRAWING CONTAINS INFORMATION DEEMED PROPRIETARY TO DIXON BRASS AND IS TO BE USED ONLY FOR THE PURPOSE FOR WHICH IT IS SUPPLIED, AND THAT IT SHALL NOT BE COPIED IN WHOLE OR IN PART WITHOUT EXPRESS WRITTEN PERMISSION THEREFROM FROM DIXON BRASS.

UNLESS OTHERWISE SPECIFIED:

DIMENSIONS ARE IN INCHES

TOLERANCES:
ANGLES: ±0°30'
.X (±.015)
.XX (±.010)
.XXX (±.005)

DIMENSIONS PER ANSI Y14.5

Dixon Brass
Westmont, Illinois U.S.A.

DRAWN	DATE
P.MONAGHAN	5/31/19
APPROVED	DATE
ECO NO.	

DRAWING NOT REPRODUCED TO SCALE

TITLE: GARDEN HOSE WASHER

SIZE	DWG. NO.	REV
A	591 SERIES	B