TBRXXXXSS

CUSTOMER DWG

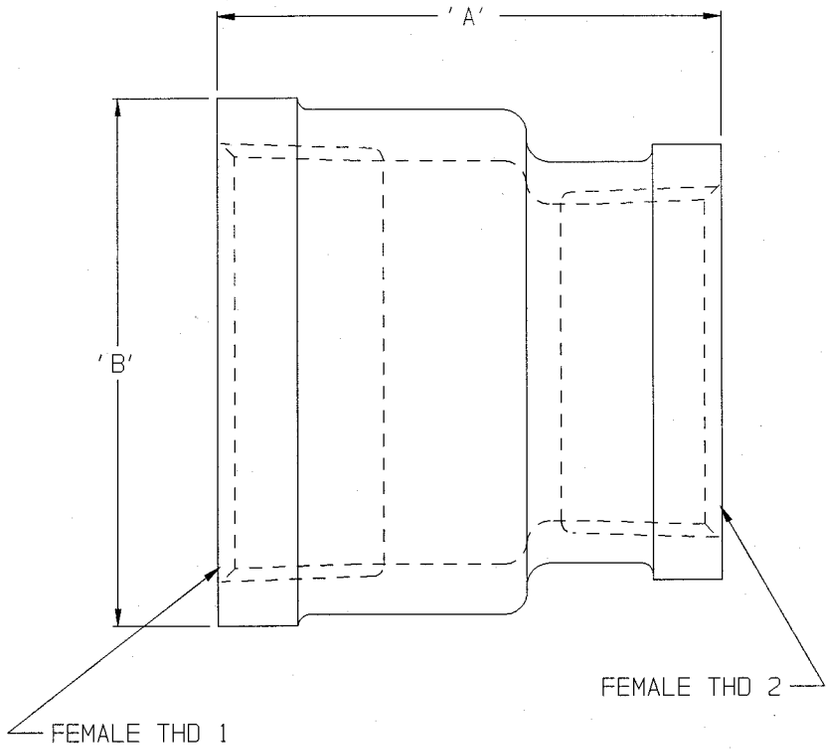

SIZE	PART NO	'A'	'B'	THD1	THD2
3" x 2"	TBR3020SS			3" NPT	2" NPT
2" x 1 1/2"	TBR2015SS	2 5/16"	2 7/8"	2" NPT	1 1/2" NPT
1 1/2" x 1"	TBR1510SS	2 1/16"	2 3/8"	1 1/2" NPT	1" NPT

CUSTOMER DWG

AGREEMENT TO MAINTAIN CONFIDENTIALITY

This drawing is owned by Dixon Valve & Coupling Co. and shall be returned upon demand. It is loaned on condition that it shall not be copied or reproduced or submitted to others without the owners consent. In accepting it subject to this condition the recipient further agrees that this drawing or any design detail or concept disclosed herein shall not be used in any way detrimental to or in competition with the Owner. If the recipient does not agree to the terms of this agreement, they shall return this drawing immediately.

DIXON

The Right Connection™

DIXON VALVE & COUPLING CO.
U. S. A.

TITLE
THREADED BELL REDUCER
FEMALE NPT x FEMALE NPT

DRAWN BY: 10/29/96 ANDREW JINKS

CHECKED BY: 10-29 96

APPROVAL 10/29/96

MAT'L STN STL

TBRXXXXSS