AV & SGV Series
Angle & Straight Hose Valves

The Right Connection®

Model AV_
UL file Ex1742

Specifications:

Female x Male
- Cast or forged brass valve; female NPT inlet x male thread outlet

Double Female
- Cast or forged brass valve; female NPT inlet x female thread outlet

Groove x Male
- Cast brass valve; groove inlet x male thread outlet

Groove x Female
- Cast brass valve; groove inlet x female thread outlet

Groove x Groove
- Cast brass valve; groove inlet x groove outlet

Product Options:

Nominal (inlet & outlet) Size and Layout:
- ❑ 1-1/2" Angle
- ❑ 1-1/2" Straight
- ❑ 2-1/2" Angle
- ❑ 2-1/2" Straight

Approvals Needed:
- ❑ UL
- ❑ ULC
- ❑ FM
- ❑ None

Country of Origin:
- ❑ United States (Domestic)
- ❑ Import

Outlet Thread:
- ❑ NPT
- ❑ NPSH
- ❑ NST
- ❑ NYC
- ❑ NYFD
- ❑ Other_____

Pressure:
- ❑ **300 PSI**
- ❑ **500 PSI** (Only available in 2-1/2" domestic cast angle)

Finishes:
- ❑ Raw cast
- ❑ Polished brass
- ❑ Polished chrome
- ❑ Rough chrome (chromed raw cast)
- ❑ Other_____

Optional Caps/Plugs:
- ❑ Pin lug
- ❑ Rocker lug

Replacement Parts:
- ❑ Handwheel
- ❑ Handwheel nut
- ❑ Valve seat rubber seal

Model Dimensions

Female x Male

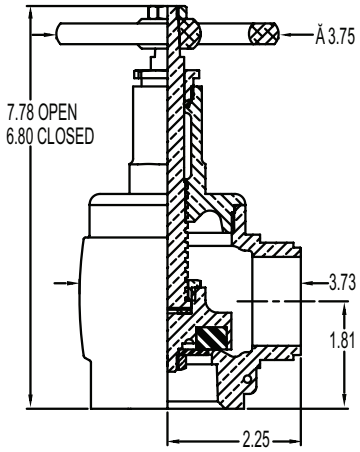

AV150

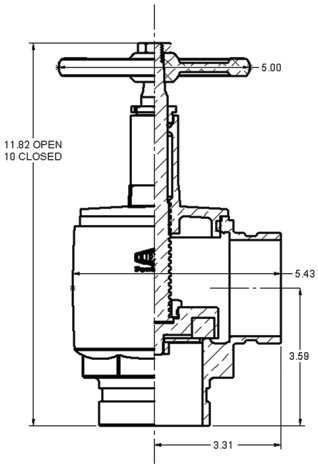

AVG250F

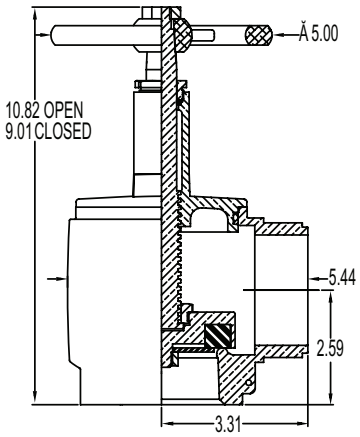

AV250

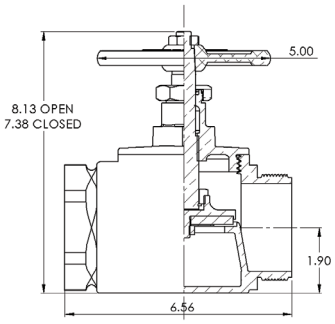

SGV250F

Dixon Fire

325 Arbor Ct
Winchester, VA 22602
ph: 877.712.6179
fx: 800.283.4966
dixonvalve.com

© 2023 DVCC • AVSS_423