The Right Connection®

Boss® LPS Butterfly Valves

PRODUCTS DESIGNED SPECIFICALLY FOR THE OIL AND GAS INDUSTRY

Applications
- Low-pressure transfer of water, acids, chemicals, slurries, and other liquids
- Designed for all low-pressure hydraulic fracturing applications

Sizes
- 2", 3", 4", 5", 6", and 8"

Features
- Locator notches around the outer edge of the body allow the valve to easily line up at center
- Actuator mounting flange outfitted with both industry standard and ISO bolt circle diameters
- Thicker stems deliver a more durable and reliable performance
- Grease Zerk added to body neck for reliable performance
- 10-position throttling handle for controlled accuracy
- For use between lightweight flanges: 125 lb., 150 lb., or butterfly valve flange
- Halar® and 316 stainless steel disc options afford better resistance to certain chemicals and acids
- Carburized disc option affords better resistance to abrasive materials and slurry mixes

Materials
- Body: ductile iron
- Disc: nickel-plated ductile iron, 316 stainless steel, Halar® coated ductile iron, carburized 8620 steel
- Seat: nitrile rubber, FKM, or red natural rubber (RNR)
- Bushings: PTFE
- O-rings: nitrile rubber
- Stems: 416 stainless steel
- Retaining pins: stainless steel
- Handle: malleable iron

NOTE: Dixon® provides actuation services for industrial and sanitary valves.

Actuated Butterfly Valve

Dixon

1 Dixon Square
Chestertown, MD 21620
ph: 877.963.4966
fx: 800.283.4966
dixonvalve.com

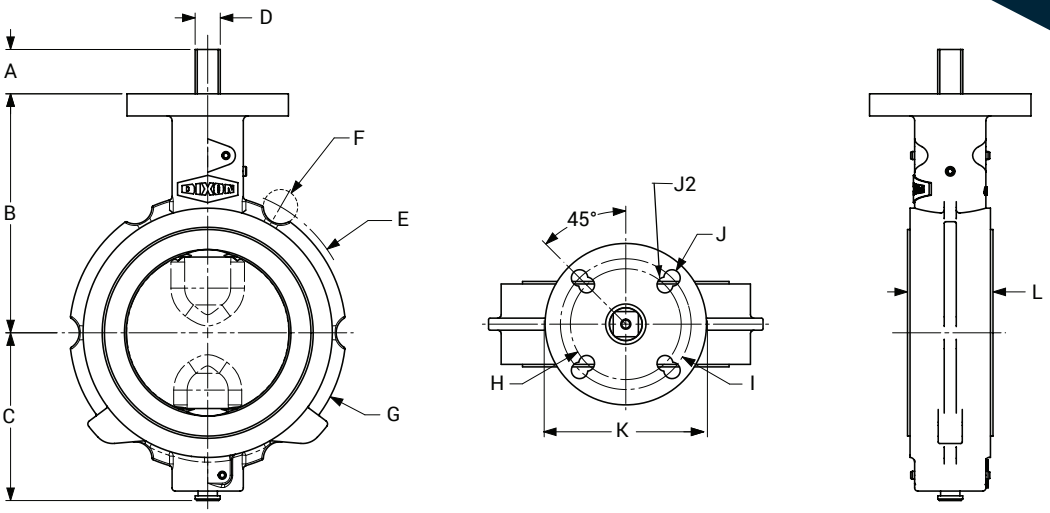

The Right Connection®

Dimensions

Size	A	B	C	D	E	F	G	H	I	J	J2	K	L
2”	1-3/32”	4”	3-5/32”	5/8”	4-1/2”	4 x 3/4”	4-1/8”	2-3/4”	3-1/4”	4 x 13/32”	4 x 13/32”	4”	1-23/32”
3”	1-3/32”	4-29/32”	3-9/16”	5/8”	4-29/32”	6 x 5/8”	5-9/32”	2-3/4”	3-1/4”	4 x 13/32”	4 x 13/32”	4”	1-27/32”
4”	1-3/32”	5-15/16”	4-3/16”	5/8”	7-1/4”	6 x 27/32”	6-7/8”	2-3/4”	3-1/4”	4 x 13/32”	4 x 13/32”	4”	2-1/8”
5”	1-1/4”	6-1/32”	4-27/32”	5/8”	7-19/32”	6 x 3/4”	7-3/4”	2-3/4”	3-1/4”	4 x 13/32”	4 x 7/16”	4”	2-3/16”
6”	1-3/32”	6-19/32”	5-7/8”	5/8”	9-1/2”	8 x 7/8”	8-3/4”	2-3/4”	3-1/4”	4 x 13/32”	4 x 13/32”	4”	2-1/4”
8”	1-1/4”	8-1/8”	7-1/16”	7/8”	11-3/4”	8 x 15/16”	11-3/4”	4-1/32”	5”	4 x 1/2”	4 x 19/32”	6”	2-5/8”

Specifications

Size	Description	Halliburton SAP#	Dixon Part #	Maximum Working Pressure (PSI)	Temp. Range
2”	GS - Cold NBR seat w/ DI Disc	100001057	2BF416DITF-NBR	**200**	**-20°F to 200°F**
2”	CS - FKM seat w/ Halar® DI Disc	---	2BF416HATF-FKM	**200**	**0°F to 200°F**
2”	CS - FKM seat w/ 316SS Disc	---	2BF416SSTF-FKM	**200**	**0°F to 200°F**
3”	GS - Cold NBR seat w/ DI Disc	100001137	3BF416DITF-NBR	**200**	**-20°F to 200°F**
3”	CS - FKM seat w/ Halar® DI Disc	---	3BF416HATF-FKM	**200**	**0°F to 200°F**
3”	CS - FKM seat w/ 316SS DI Disc	---	3BF416SSTF-FKM	**200**	**0°F to 200°F**
4”	GS - Cold NBR seat w/ DI Disc	100001149	4BF416DITF-CNBR	**200**	**-20°F to 200°F**
4”	GS- FKM seat w/ DI Disc	---	4BF416DITF-FKM	**200**	**0°F to 200°F**
4”	CS - FKM seat w/ Halar® DI Disc	---	4BF416HATF-FKM	**200**	**0°F to 200°F**
4”	DS - Red Natural Rubber seat w/ carburized 8620 Disc	100001151	4BF416CBTF-RNR	**50**	**-20°F to 150°F**
4”	WS - Cold NBR seat w/ carburized 8620 Disc	102968216	4BF416CBTF-CNBR	**200**	**-20°F to 200°F**
5”	GS - Cold NBR seat w/ DI Disc	100001178	5BF416DITF-NBR	**200**	**-20°F to 200°F**
5”	DS - Red Natural Rubber seat w/ carburized 8620 Disc	100001179	5BF416CBTF-RNR	**50**	**-20°F to 150°F**
5”	WS - Cold NBR seat w/ carburized 8620 Disc	102968217	5BF416CBTF-NBR	**200**	**-20°F to 200°F**
6”	GS - Cold NBR seat w/ DI Disc	100001186	6BF416DITF-NBR	**200**	**-20°F to 200°F**
8”	GS - Cold NBR seat w/ DI Disc	100001193	8BF416DITF-NBR	**175**	**-20°F to 200°F**

NOTE: GS - General Service, CS - Chemical Service, DS - Dry Service, WS - Wet Service

© 2024 DVCC •DBV_0824