The Right Connection®

D2C-Series Actuator Style Coupler

The D2C-Series style couplers work with the DBA-Series adapters for applications where automatic closure for the coupler is not desired.

Applications

- Suited for vapor recovery, suction pump line and other applications where it is necessary to easily drain the hose or pipe for cleaning
- Can also be used when product retention in a hose or pipe is desired and damage from accidental spill from an open coupler is not a concern
- Couplers work with the DBA poppeted adapters on page 94 in applications where automatic closure for the coupler is not desired

Features

- EZ Boss-Lock cam arms
- Stainless steel locking lever standard
- Use with standard cam and groove dust plugs sized one size larger than the dry disconnect size
- Prevents spillage from normal and accidental disconnection of the connection

Materials

- Body: 316 stainless steel
- Internal components: 304 stainless steel
- Replacement parts are available; contact Dixon® for more information

Female NPT	Coupler Size	Seal Material	Stainless Steel Part #
1-1/2"	2"	Nitrile rubber	D2C71-150
2"	2-1/2"		D2C71-200
1-1/2"	2"	FKM	D2C72-150
2"	2-1/2"		D2C72-200
1-1/2"	2"	PTFE Encapsulated Silicone	D2C73-150
2"	2-1/2"		D2C73-200
1-1/2"	2"	EPDM	D2C74-150
2"	2-1/2"		D2C74-200
1-1/2"	2"	PTFE Encapsulated FKM	D2C77-150
2"	2-1/2"		D2C77-200
1-1/2"	2"	FKM-B	D2C79-150

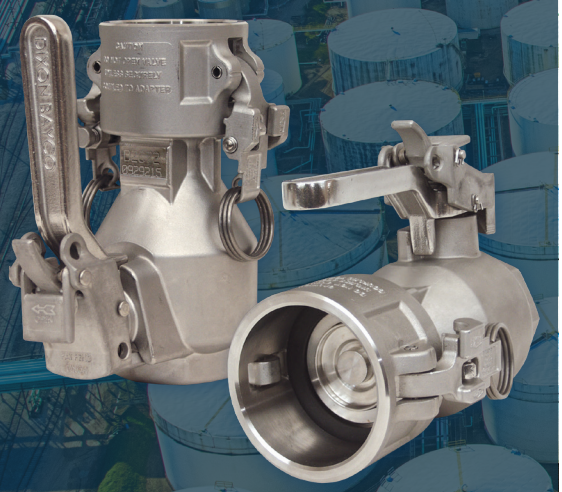

1-1/2" and 2" models shown

Dixon Bayco®

7280 Union Centre Blvd
West Chester, OH 45014
ph: 877.963.4966 • 513.874.8499
fx: 800.283.4966 • 513.874.8399
dixonvalve.com

© 2022 DVCC • D2CASC_322

Product Configurator for D2C-Series Couplers

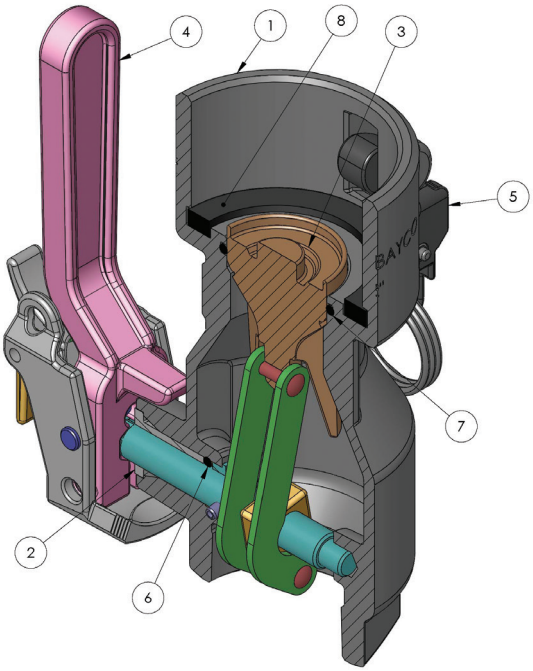

D2CXY-###
X = coupling material
Y = seal material
= thread size

example
part#: D2C72-200
description: D2C stainless steel actuator style coupler with FKM seals and 2" NPT

Coupling Material

X	Drawing Item Numbers				
	1	2	3	4	5
	Body	Bearing	Poppet	Handle	Cam Arm
7	stainless steel	PTFE/FG	stainless steel	stainless steel	stainless steel

Seal Material

Y	Drawing Item Numbers		
	6	7	8
	Soft O-ring	Pop O-ring	Gasket
1	Nirtile rubber	PTFE/FKM	Nirtile rubber
2	FKM	PTFE/FKM	FKM
3	Kalrez®	PTFE/FKM	PTFE/Silicone
4	EPDM	PTFE/FKM	EPDM
6	Kalrez®	PTFE/FKM	PTFE/FKM
7	Kalrez®	PTFE/FKM	PTFE/FKM
9	FKM-B	PTFE/FKM	FKM-B

All metallic parts not listed are stainless steel.

© 2022 DVCC • D2CASC_122