Dixon Fire

Reversible Concealed Fire Department Connections

The Right Connection®

4025REV90

90CREV5025

Specifications:

Double Clapper (Bottom Outlet/90°)

- Cast Brass Fire Department Connection; dual female inlets x female NPT thread outlet; **250 PSI**

Product Options:

Nominal Size and Layout:

Double Clapper (Rear Outlet)

- ❑ 4" x (2) 2-1/2"
- ❑ 4" x (2) 3"
- ❑ 6" x (2) 2-1/2"
- ❑ 6" x (2) 3"

Double Clapper (Bottom Outlet)

- ❑ 4" x (2) 2-1/2"
- ❑ 4" x (2) 3"
- ❑ 6" x (2) 2-1/2"
- ❑ 6" x (2) 3"

Approvals Needed:

- ❑ UL
- ❑ ULC
- ❑ FM
- ❑ None

Optional Caps/Plugs:

- ❑ Pin lug with chain
- ❑ Rocker lug with chain

Optional Snoots:

- ❑ Female Swivel x Male NPT
- ❑ Female Swivel x Female NPT
- ❑ Other_____

Inlet Thread (If ordering snoots):

- ❑ NST
- ❑ NYFD
- ❑ NYC
- ❑ NPSH
- ❑ Other_____

Optional Wall Plates:

- ❑ Standpipe - polished
- ❑ Standpipe - chrome
- ❑ Auto-sprinkler - polished
- ❑ Auto-sprinkler - chrome
- ❑ Standpipe/Auto-sprinkler - polished
- ❑ Standpipe/Auto-sprinkler - chrome
- ❑ Other_____

Model Dimensions

4025REV90

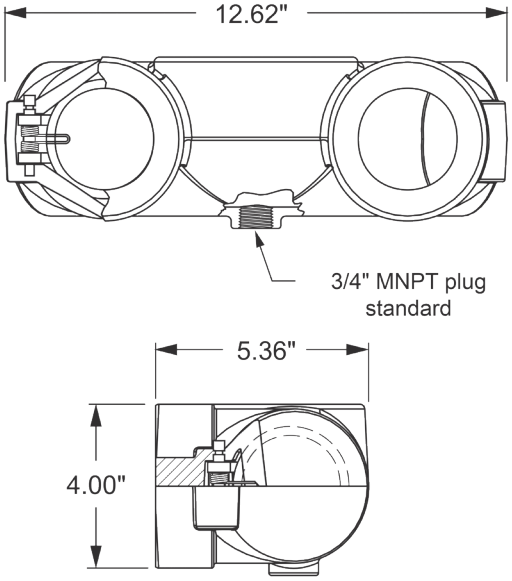

90CREV5025

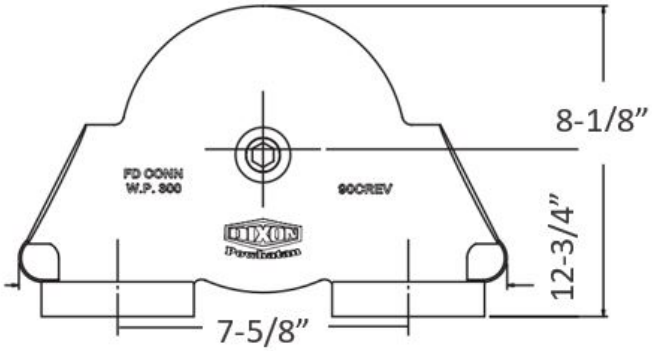

Warning: Dimensions are for reference only, consult Dixon® for dimensions of other available configurations

Dixon Fire

325 Arbor Ct
Winchester, VA 22602
ph: 877.712.6179
fx: 800.283.4966
dixonvalve.com

© 2023 DVCC • RCFDC_423