The Right Connection®

ST-Series

HEAVY-DUTY FLUSHFACE FITTINGS

Interchangeable with Snap-Tite 71-Series, the machined components in the ST-Series are manufactured from solid steel or 316 stainless steel bar stock for heavy-duty operation on oil platform, offshore, and construction equipment.

The ST-Series is designed to maximize corrosion resistance and extend service life, with stainless steel balls, retaining rings, and springs housed inside a hardened steel coupler sleeve.

All couplers and plugs incorporate PTFE anti-extrusion rings to protect the seal components from dynamic impulse damage. Nitrile (Buna-N) seals are standard, providing a temperature range of **-40°F to 250°F (-40°C** to **121°C)**. Seal kits are also available.

Options include oxygen cleaning, locking sleeve, plugs, caps, and bulkhead kits.

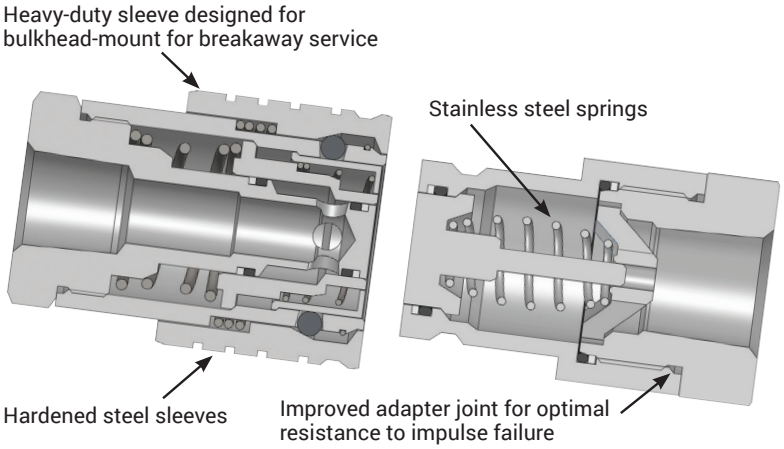

Dixon Quick Coupling

2925 Chief Court
Dallas, NC 28034
ph: 800.839.8980 • 704.334.9175
fx: 800.839.9022 • 704.334.9002
dixonvalve.com

© 2020 DVCC • STSERIES_220